Effects of Job Stress on Banker's Turnover Intention

Shamim Al Aziz Lalin
Mazharul Hasan Mazumder, Ph.D
SakufaChowdhury

Abstract

This research aimed to investigate the relationship between job stress and turnover intention in the banking sector of Bangladesh. Data have been collected from 310 employees of private commercial banks of Bangladesh using a structured questionnaire, while the respondents were selected through a simple random sampling method. Data were analyzed based on descriptive statistics and structural equation modeling (Smart PLS-SEM). Final findings indicate that there exists a positive relationship between job stress and turnover intention. Policymakers could benefit from the study findings in that they can frame their policy of reducing employee turnover in line with the study findings.

Keywords: Job stress, job security, working hour, work load, turnover intention.

1.Introduction

Job stress is prevalent in modern life. The impact of job stress on employees' physical and mental health is tremendously increasing, and it causes substantial financial losses to both employees and employers (Dunham 2001; Landsbergis 2003). In recent times, the interest among researchers in this field has increased a lot compared to the past (Dunham 2001). Role stress, one of the psychosocial stressors in the work environment, negatively impacts the employee's psychological health and organizational outcomes (Karasek and Theorell, 1990). As the way of employees' interactions with their work environment is changing dynamically, job stress originates from there. The negative outcome of employees' interactions and reactions to the characteristics of the work environment is job stress (Jamal, 2005). Job stress originating from various sources has a multifaceted effect on employees (Arshadi and Damiri, 2013). Employee turnover intentions have been a major concern for organizations for many years (Chen et al., 2010). Turnover intention is defined as a process of an employee leaves the organization willingly (Tett and Meyer, 1993; Applebaum et al., 2010). The employees working in different organizational sectors suffer from long working hours, excessive work pressure from the supervisor, an unrealistic target. Particularly, the employees who work in private

commercial banks, both long working hours and much work pressure are affecting their mindset. So experiencing job stress is an inevitable reality for the banking employees of Bangladesh (Abbasi, 2015). Role conflict is also commonly seen among these employees as they require attention in too many tasks at a time (Repetti et al., 1989). Not only long working hours and work overload but also fewer holidays, hectic work hours, tough targets, less supervisory and coworkers' support, lack of autonomy make their work environment difficult. Unreasonable workload always makes them busy at the workplace. Most of the time, bankers have to stay in the office even after their working hours have passed, making them very tired. As a result, they are late to go home, giving less time to their family. This situation creates an imbalance between their paid work and family. On the other hand, employees experience unhealthy competition, which generates a hostile work environment. Consequently, employees are found too much stressed at their workplace.

Many banking employees frequently move from one bank to another bank due to job-related stress. In recent times, many employees working in private commercial banks have been trying to switch their banking job. Both researchers and employers are finding the root causes of employees' turnover intentions. As the banking sector is one of the leading financial sectors of a country, this sector requires highly skilled and experienced employees to contribute to the economy of the country. This increased tendency to leave the organization should be examined. The main objective of this study is to explore the relationship between job stress and turnover intentions of banking employees in Bangladesh. The central research question of the study:

What is the relationship between job stress and turnover intentions of the banking employees in Bangladesh?

2. Literature Review

The wellbeing of an individual is hampered in the society due to work related stress. Many researchers consider a job or occupational stress a significant threat to an individual's and organization's wellbeing (Rub, 2006; Larson, 2004). The role of job stress has been found effective in increasing absenteeism and decreasing productivity (Paillé, 2011; Brun and Lamarche, 2006). Employees experience physical and psychological imbalance due to job stress (Rivai and Sagala, 2011). Smith (2000) identified some indicators of work stress like excessive workload, long working hours, complex nature of the job, inflexible working hours, inconsistency at work, high job involvement, lack of coworker's support, lack of autonomy, lack of job security,

unrealistic target, bullying at the workplace, work-family imbalance, and role conflict. The impact of job stress in an organization is not only on junior staff but also on senior staff (Blau, 1981). The physical and mental discomfort comes from the daily employee conflict. Sometimes their dispute goes to the customer, arguing in front of the customer (Netemeyer et al., 2005). For all these reasons, it is not very comfortable to contact the customer face to face (O'neill and Davis, 2011). The job stress which comes from the work overload, long working hours, hostile work atmosphere, job insecurity, and demanding job roles creates a barrier on the way of employees' good interaction and well-functioning (Hsieh and Yen, 2005). Employees experience depression, anxiety, physical and mental health-related problems, low motivation, and reduced morale due to workplace stress (Motowidlo et al., 1986; Chiang et al., 2010; Blase, 1986). Only a few employees who are successful in their careers can make an attempt to overcome the job stress using a variety of methods. Conversely, most of the employees fail to manage the stress and cope with the adverse situation. Consequently, the increased use of drugs and alcohol, the increased rate of absenteeism and disease, decreased performance, and poor interpersonal communication becomes visible (Law et al., 1995; Lazarus and Launier, 1978). Employees with high job stress cannot achieve the organizational goals that negatively impact the mission and vision of the organization (Shankar and Keerthi, 2010). Many employees who work under unfavorable conditions get a low salary and experience long working hours. Work overload goes through severe job stress and thinks to leave the organizations (Lo and Lamm, 2005). This insufficient pay and job insecurity have been identified as a great source of stress by Topaloğlu and Turner (1998). Arsenio and Loria (2014) emphasized some important sources of stress, including low pay, discriminating wages, much workload, role conflict, and job insecurity.

Job stress is one of the most influential factors that influence the intention of the employees to leave the job. Employees under a lot of stress lack adequate motivation and commitment (Arshadi and Damiri, 2013). It is understood that there is a turnover tendency among the employees when their performance decreases (Applebaum et al., 2010). Too much stress increases the turnover intentions of employees (Chen et al., 2010; Applebaum et al., 2010). There are also affirmative connections between job stress and turnover intention (Noor and Maad, 2008). A strong relationship between job stress and turnover intention has been found (Arshadi and Damiri, 2013). Chiu et al. (2005) and Yoon and Kim (2010) have identified a meaningful relationship between job stress and employee turnover intention. Negativism, burnout, voluntary withdrawal, low morale, absenteeism, and turnover intentions are the expected outcomes of job stress (Hon et al., 2013). Previously, different empirical studies on job stress and employees' turnover intention have been conducted, but very few empirical studies have been conducted on

examining the relationship between job stress and job turnover intentions of Bangladeshi bankers.

3. Research Hypothesis

3.1 Working Hours and Turnover Intentions

Many researchers have identified the significant relationship between long working hours and turnover intentions (Kutilek, 2000; Clark, 1981; Rousan and Henderson, 1996; Clark et al., 1992; Van Tilburg, 1987; Young, et al. 2013; Van Tilburg, 1988; Safrit and Owen, 2010; Strong and Harder, 2009; Harder et al. 2015). Many studies have shown that long working hours increase the turnover intentions among employees (Baldwin, 2003; Ayas, 2006). There is a lack of detailed discussion of the relationship between long working hours and turnover intentions in Asia (Woodrow, 2006). Various studies have revealed that bankers in developing countries like Bangladesh have more working hours than bankers in other developed countries (Fang Mao, et al. 2011; Yang, 2007). Employees' prolonged working hours and long office hours have meaningful impact on their turnover intention (Tsai et al. 2016). Therefore, from the above discussion, it is hypothesized that:

H1. Long working hour influences the bankers' turnover intention.

3.2 Work Load and Turnover Intention

Many previous studies have found a credible link between excessive workload and turnover intentions (Heponiemi et al., 2009; Kankaanranta, 2007; Masselink et al., 2008). A positive link between a heavy workload and employee's turnover intentions has been found in many research (Van Tilburg, 1987; Clark, 1981; Strong and Harder, 2009; Clark et al. 1992; Kutilek, 2000; Harder et al. 2015; Safrit and Owen, 2010; Van Tilburg, 1988; Young et al. 2013). Employees perceive stress as an individual response to the imposed heavy workload by their supervisor. Working employees often fail to adjust to the excessive workload, unfavorable working environment, and unpleasant working conditions (Gerber et al., 1987; Parker and DeCotiis, 1983). The employees working in private commercial banks experience job stress due to much workload, which ultimately contributes to generating their tendency to leave the current organization (Arsenio and Loria, 2014). Therefore, on the basis of the above discussion, it is hypothesized that:

H2. Work overload influences the bankers' turnover intention.

3.3 Job Security and Turnover Intention

Job security is a situation when employees feel that they might not lose their current fixed-job in the future (Abolade, 2018). Having job insecurity in the organization harms the well-being of their employees (Hellgren et al., 1999). More job insecurity generates more job stress among the employees (Mauno et al., 2001). Employees show adverse reactions when they are threatened with losing their jobs (Greenhalgh and Rosenblatt, 1984; Çınar et al., 2014). Putra and Suana (2016) referred to the fear of losing a job in the future as job insecurity. The tendency to leave the organization is increased when employees are dissatisfied with their work due to fear of losing jobs (Hanafiah, 2014). Employees who are afraid of losing their job associate themselves with job withdrawal behaviors (Probst, 1999), that contributes to employee turnover (Ashford et al., 1989; Davy et al., 1991). When employees experience fear of losing their job, their intention to quit their job goes to the highest level (Arijanto et al., 2020). It has been established from various empirical studies that there is an inverse relationship between job insecurity and turnover intention (Borg and Elizur, 1992; Jacobson, 1991). Therefore, from the above analysis, it is hypothesized that:

H3. Job insecurity influences the bankers' turnover intention.

4.0 Theoretical Framework

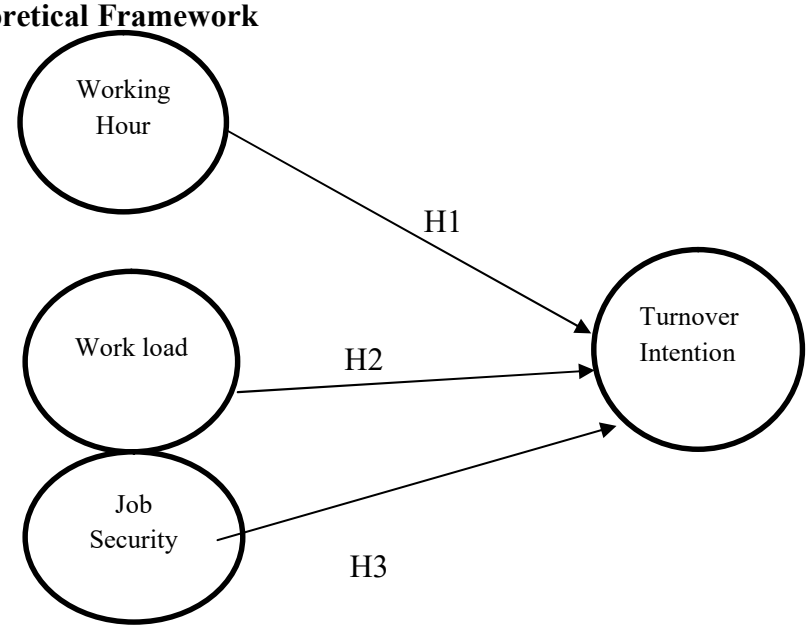

Figure -1.1: Theoretical framework of effects of job stress on banker's turnover intention

5.0 Methodology of the Study

This study mainly followed a quantitative research method. As a research technique, the survey method has been used to collect primary data through a structured questionnaire. The multiple-choice questions are used to manage the demographic data in the structured questionnaire. The five-point Likert scale varying from 1='Strongly disagree' to 5='Strongly agree' has been used in this study. The secondary data has been collected from different articles, books, and computerized databases for literature review.

5.1 Population and Sample

The population mainly included all employees of the banking sector in Bangladesh. In selecting respondents, the simple random sampling method has been followed, and primary data has been collected from the selected private commercial banks. Email surveys using Google forms and personal interviews have been used in this study to collect data from different respondents. A total of 310 respondents has been surveyed, considering the optimum size of the sample determined by statistical method. Email survey using Google form has been conducted all over Bangladesh as there is no location barrier in case of email survey. In contrast, the personal interview has been conducted only from Dhaka, Chattogram, Cumilla, and Sylhet town based on the researcher's convenience. Among 310 respondents, 133 the private discussions, while 177 are email respondents. In the mail survey, about 40% of respondents replied after one or two reminders among 400 emails sent to the potential respondents. To input the data and carry out the required analysis on it, SPSS version 21.0 has been used.

6.0 Results and Discussion

6.1 Demographic Profile

Demographic characteristics of the samples classify respondents according to gender, marital status, age, and monthly income. The demographic characteristics of the respondents of the study are shown below:

Table 1.1: Profile of the Survey Respondents

Characteristics		Frequency	Percentage (%)
Gender	Male	277	89.4
	Female	33	10.6
	Total	310	100
Bank Type	Public	52	16.7

	Private	258	83.3
	Total	310	100
Marital Status	Single	128	41.2
	Married	180	58.3
	Separated	2	0.5
	Total	310	100
Age	Below 30	128	41.2
	30-34	107	34.5
	35-39	48	15.5
	40-44	19	6.3
	45-49	4	1.4
	Above 50	4	1.2
	Total	310	100
Family Structure	Nuclear	116	37.5
	Joint	192	62.0
	Extended	2	0.5
	Total	310	100
Family Size	1-4	118	38.2
	5-6	131	42.4
	7-8	32	10.2
	More than 8	29	9.3
	Total	310	100
Personal Income	Below 30000 Taka	86	27.8
	30000-40000 Taka	132	42.6
	40000-50000 Taka	37	11.8
	50000-60000 Taka	21	6.7
	Above 60000 Taka	34	11.1
	Total	310	100
Education	HSC	3	0.5
	Graduation	52	16.7
	Post-graduation	255	82.8
	Total	310	100
Workplace	Dhaka	108	35.0
	Chattogram	57	18.3
	Sylhet	123	39.8
	Cumilla	22	6.9
	Total	310	100
Job Location	Thana Level	129	41.7
	District Level	181	58.3
	Total	310	100
Job Responsibility	Branch Manager	20	6.5

	Operation Manager	31	10.0
	General Employee	259	83.6
	Total	310	100

Descriptive statistics summarize the characteristics of the respondents, and the graphical representation of the traits helps the researcher to understand the nature of the sample surveyed.

Following table 1.1 summarizes the demographic profile of the respondents. Out of 310 respondents, the female respondents were only (10.6%), and the rest were males (89.4%). The highest number of respondents was from private banks (83.3%). The rest were from public banks (16.7%). The marital status shows most (58.3%) of the respondents were married, and the unmarried number was (41.2%) and (0.5%) respondents were separated. The respondents' age range is between below 30 and above 50. The highest number of respondents age is below 30, and 30 to 34 is second highest, i.e. (41.2%) and (34.5%) respectively. The (6.3%) respondents are 40 to 44, and the (1.4%) respondents are 45 to 49. Whereas only (1.2%) are aged respondents. Among the respondents, (37.5%) belong to a nuclear family, and (62%) belong to a joint family. Only (0.5%) respondents belong to extended family. The family size of the respondent is measured through the family member of that particular family. The small family has only four members; medium denotes 5 to 6 members, large denotes 7 to 8 members, and more than 8 denotes the extra-large family size. The medium and small family sizes are (42.4%) and (38.2%). The large family size is declining daily, which is (10.2%) and only (9.3%) is extra-large family. Majority respondents (42.6%) income range 30,000 – 40,000 TK and (27.8%) have below 30,000 TK. Few respondents (11.8%) income range 40000 – 50,000 TK and (6.7%) respondents income range 50,000 – 60,000 TK. As the scenario showed, only (11.1%), respondents may be able to earn more than 60,000 TK. In the education, the number of respondents showed that only (0.5%) respondents did not complete their graduation. Employees completed their graduation and post-graduation are (16.7%) and (82.8%). Among the respondents, (39.8%) from Sylhet city and (35%) from Dhaka city. Whereas (18.3%) from Chattogram city and (6.9%) from Cumilla. From a district level, (58.3%) respondents and (41.7%) from the thana level participated in this study. The highest number of respondents were general employees (83.6%). The operation manager and branch manager participation were (10.0%) and (6.5%) respectively.

6.2 Descriptive Statistics

This study attempts to understand the effects of job stress on bankers' turnover intention. Descriptive statistical data shows the separate items of the variables and their mean value with standard deviation.

Descriptive statistics provide simple summaries about the samples and measures and form the basis of quantitative analysis. Descriptive statistics are used to determine whether there is sufficient variation in the responses for each variable. The descriptive analysis checks the percentage form of the variables and develops ideas regarding the respondents' opinions. In Appendix section B, the researcher represented the descriptive statistics of the different factors like working hours, workload, and job security.

6.2.1 Descriptive Statistics for Working Hour, Work Load and Job Security

In Appendix B, Table B1 shows the items related to bankers' working hours. Among the items, inflexibility in time, less part-time work scope, minimum scope to work under a compressed work schedule, and inflexible working hour are measured. Inflexibility in time, less part-time work scope, minimum scope to work under a tight work schedule, and hard-working hours all showed an agreed consent of more than 3. That means the bankers believed the items are responsible for generating job stress, i.e., inflexibility in time, inflexible working hour, less part-time work scope, and minimum scope to work under compressed work schedule (3.77, 3.71, 3.62 and 3.56) and the SD of the variables are also more than 1. This indicated the items are essential for the working hours of the bankers.

In Appendix B, Table B1 showed the descriptive statistics items related to workload. Minimum job-sharing opportunities, work overload, role overload, lack of cooperation from the co-workers, lack of continuous support from the colleagues are the most important item as the value of mean score showed is near to four, i.e. (3.91, 3.85, 3.72, 3.62 and 3.55) respectively. This means the bankers have a positive attitude towards the item. Along with the mean, score the SD of the variables is also emergent; as shown, four-item have more than 1.

In Appendix B, Table B1 shows the descriptive statistics items related to job security. All items have a strong mean score, as the items are important for measuring job stress. Fear of losing the job, vulnerability at the workplace, slow promotion, bullying at the workplace, absence of equal employment opportunity, work under the rigid employment agreement, lack of equal pay opportunity, all showed a agree consent which is more than 3. That means the bankers believed the items are responsible for generating job stress i.e. fear of losing job, absence of equal employment opportunity, work under rigid

employment agreement, vulnerability at workplace, bullying at workplace, lack of equal pay opportunity, and slow promotion (3.91, 3.87, 3.76, 3.74, 3.64, 3.61 and 3.57) and the SD of the variables are also more than 1. This indicated the items are important for the job security of the bankers.

6.2.2 Descriptive Statistics for Turnover Intention

In Appendix B, Table B2 shows the descriptive statistics items related to turnover intention. All items play a vital role because of their mean score. According to the respondents' mean score, which is more than 3, for example (3.88, 3.83), it is clear that they experience excessive stress and high burnout in jobs. This is supposed to explain that the respondent agreed to the items of turnover intention. Furthermore, lack of loyalty to the organization, thinking of leaving the organization, and high absenteeism in the job also explained a positive response as the point showed (3.71, 3.67, and 3.60) respectively, and the SD of the variables are also more than 1. This indicated the items are important for bankers' turnover intention.

6.3 Structural Equation Modeling (SEM) Analysis:

This study performs a two-step PLS-SEM analysis. To begin, the measurement model (outer model) shows the indicators and their relationships to the constructs. Second, the structural model (inner model) incorporates the constructions and their path links (Hair et al., 2017). Finally, the structural model is built from the latent constructs based on their predicted interrelationships (Awang, 2012).

6.3.1 Evaluation of the Measurement Model

Confirmatory factor analysis (CFA) was used to determine the reliability and validity of the hierarchical components. The measurement model was tested for indicator reliability, composite reliability, convergent validity, and discriminant validity, as recommended by Hair et al. (2017). As shown in Table 1, factor loadings were analyzed to see if the reflective constructions' indicators were reliable. The indicator factor loadings should be equal to or greater than 0.7 (Fornell&Larcker, 1981). Table 1 shows the reliability of the study.

Table 1: Internal Consistency, Convergent Validity, composite reliability, AVE and Collinearity Statistics (VIF)

Construct	Indicators	Factor Loadings	Cronbach's alpha	CR	AVE	VIF
Working Hour (WH)			0.778	0.795	0.573	
	WH1	0.804				1.310
	WH3	0.878				1.357
	WH4	0.548				1.297
Work load (WL)			0.771	0.832	0.500	
	WL1	0.588				1.315
	WL2	0.693				2.762
	WL3	0.696				2.871
	WL4	0.728				1.313
	WL5	0.814				1.568
Job security (JS)			0.870	0.900	0.565	
	JS1	0.604				1.381
	JS2	0.695				1.736
	JS3	0.786				2.178
	JS4	0.785				2.119
	JS5	0.763				1.991
	JS6	0.800				1.957
	JS7	0.808				1.958
Turn Over Intension (TI)			0.723	0.845	0.646	
	TI1	0.823				1.753
	TI4	0.856				1.810
	TI5	0.727				1.208

Source: The Author, Based on the Smart-PLS (SEM) analysis on survey data

All of the items, as shown in Table 1 and Figure 1, exceed the 0.7 criteria. Indicators with scores between 0.4 and 0.7, on the other hand, should only be deleted if they have a negative impact on the average variance extracted (AVE) of their construct (Hair et al., 2017). Cronbach's Alpha (> 0.70) is above the recommended level for all variables (Table 1). However, all constructs have a CR value of more than 0.70, which is the acceptable minimum. PLS-SEM prioritizes indicators based on their individual

reliability, whereas CA value assumes that all indicators are equally trustworthy. On the other hand, the CR takes these disparities in item dependability into account and is thus a better choice for evaluating internal consistency reliability using PLS-SEM (Hair et al., 2017). As a result, it can be stated that all structures have internal consistency. The average variance extracted (AVE) was then assessed to determine the convergent validity of the reflective constructs. According to Fornell&Larcker (1981), a construct's AVE value should be more than 0.5 to indicate convergent validity, which was the case for all constructs in Table 1. The AVE indicates how well a construct can explain the variance of its indicators and how much of the variance can be attributable to measurement error (Chin et al., 2010).

Finally, the discriminant validity was assessed using the Fornell-Larcker criterion and cross-loadings, as is customary. The discriminant validity of a concept reflects how distinct it is from the other constructs in the model. The square root of each construct's AVE must be greater than its correlation with the other constructs to meet the Fornell-Larcker criterion (Table 2). Furthermore, cross-loading evaluation adds to the discriminant validity (Henseler et al., 2015). The reflectively assessed constructs have met all model evaluation requirements, indicating their validity and reliability.

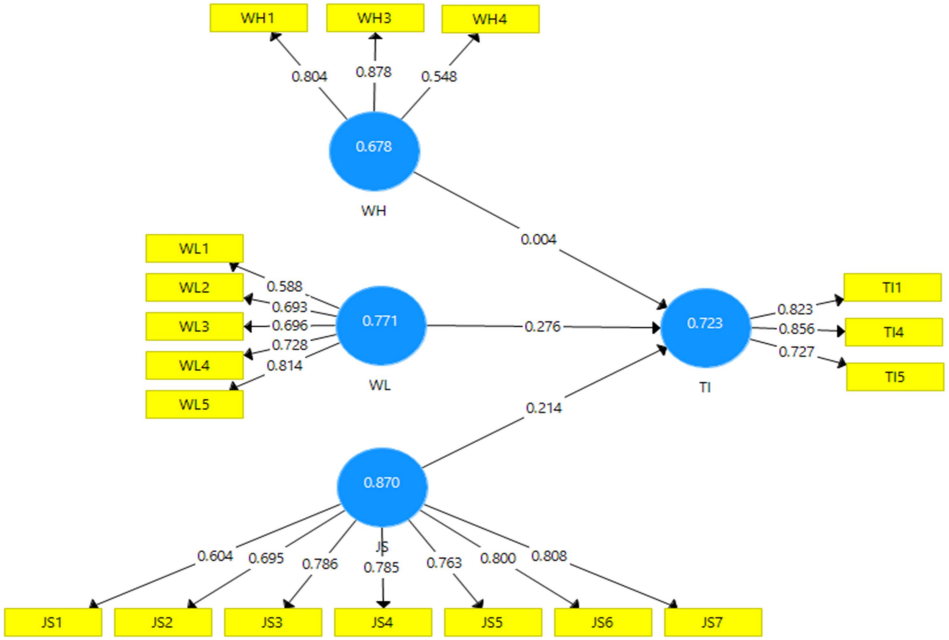

Figure 1: Measurement Model Assessment. It contains the measurement model assessment before hypotheses testing. It shows the factors loadings of each item and Cronbach's Alpha.

Table 2: Discriminant Validity (Fornell-Larcker Criterion)

	JS	TI	WH	WL
JS	**0.752**			
TI	0.388	**0.804**		
WH	0.471	0.264	**0.757**	
WL	0.623	0.412	0.574	**0.707**

Source: The Author, Based on the Smart-PLS (SEM) analysis on survey data

6.3.2 Evaluation of Structural Model:

Evaluation of a structural model with the help of Smart PLS, a structural model was examined after the measurement model was assessed. The direct and indirect effects were investigated in order to achieve this goal. The route coefficient and "t" value were used to confirm the hypothesis. R-Squared (R2) was also investigated. As demonstrated in Table 3 and Figure 2, the current investigation comprises seven (03) direct hypotheses. Because the t-value was more than 1.96, two direct hypotheses (H1, H3) were supported, but one direct hypothesis (H2) was not supported because the t-value was less than 1.96.

Table 3: Structural Model Assessment (Direct Effect Results and Decision)

Hypothesis	Relationship	Original Sample (O)	Sample Mean (M)	Standard Deviation (STDEV)	T Statistics (|O/STDEV|)	P Values	Decision
H_1	**JS -> TI**	0.211	0.214	0.053	3.969	**0.000**	Supported
H_2	**WH -> TI**	0.034	0.037	0.087	0.395	**0.693**	Not Supported
H_3	**WL -> TI**	0.251	0.252	0.059	4.286	**0.000**	Supported

Source: The Author, Based on the Smart-PLS (SEM) analysis on survey data

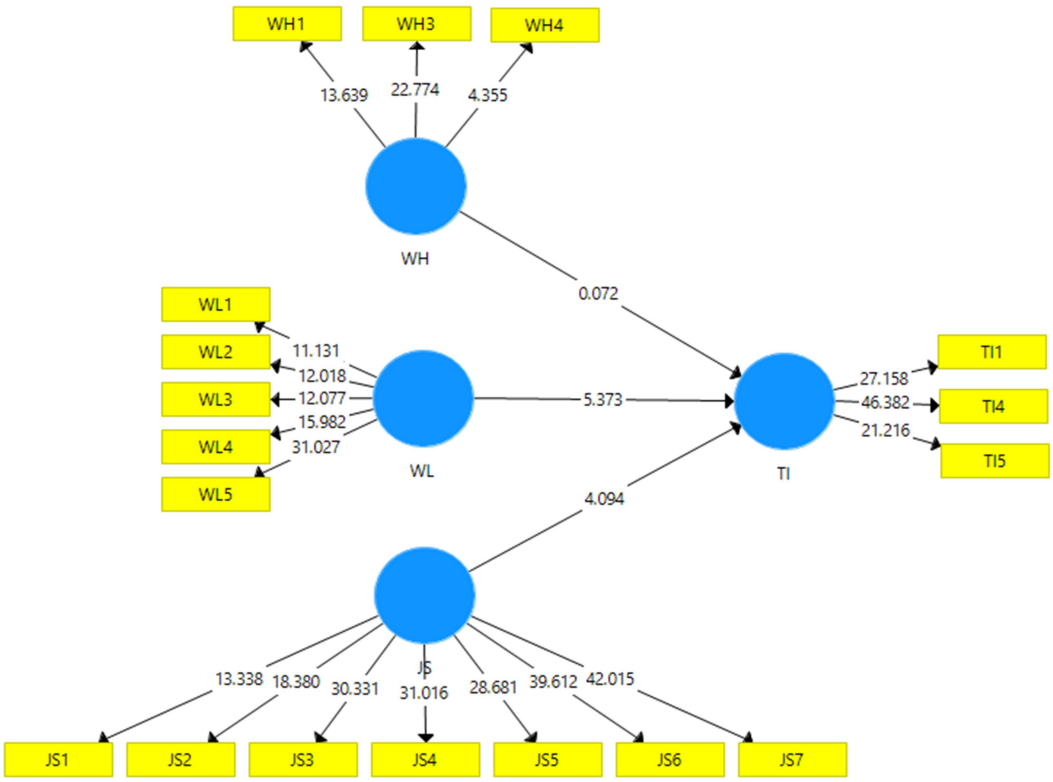

Figure 2: Structural Model Assessment (Direct Effect). It contains the hypotheses testing for direct and indirect relationships. Majorly, it shows path coefficient and t-value to accept or reject the hypotheses

As a result, the current study used Smart PLS (Ringle et al., 2015) to explore the effect of Job security (JS), working hours (WH), workload (WL), through bootstrapping approach and 499 re-sampling to examine the t-value. The findings of the analysis are shown in Table 5. Only one of the cases has a t-value less than 1.96. As a result, the working hour (WH), H2 were not supported, but H1 and H3 were supported (Table 3 and Figure 2). The coefficient of determination R2 is used to assess the research model's prediction power. The cumulative influence of all exogenous latent factors on the endogenous latent variable is represented by this coefficient. For endogenous latent variables, the study found values of R2 and values of adjusted R2 .527 and 0.501, respectively. The study model provides a moderate prediction potential for endogenous components based on these results.

Conclusion

The impact of job stress on employees' physical and mental health is tremendously increasing, and it causes substantial financial losses to both employees and employers. Employee turnover intentions have been a significant concern for organizations for many years. Many employees working in private commercial banks have been trying to switch their banking job in recent times. As the banking sector is one of the leading financial sectors of a country, this sector requires highly skilled and experienced employees to contribute to the country's economy. This study has examined the reasons behind the increased tendency to leave the organization. The study's findings indicate a positive relationship between job security and employee turnover intentions and workload and turnover intention. But, this study has not found a long working hour impact on turnover intention in the banking sector of Bangladesh. Therefore, policymakers of the banks should take ardent actions to mitigate employee turnover.

References

Abbasi, T. F. (2015) Impact of Work Overload on Stress, Job Satisfaction, and Turnover Intentions with Moderating Role of Islamic Work Ethics, Management Studies and Economic Systems (MSES), 2 (1), 27-37

Abolade, D. A. (2018).Impact of Employees' Job Insecurity and Employee Turnover on Organizational Performance in Private and Public Sector Organizations.*Studies in Business and Economics,* 13(2), 5-19.

Applebaum, D., Fowler, S., Fiedler, N., Osinubi, O. and Robson, M. (2010), The impact of environmental factors on nursing stress, job satisfaction, and turnover intention. The Journal of Nursing Administration, 40, 323.

Arijanto, A., Marlita, D., Suroso, A. and Purnomo, R. (2020). How is the Effect of Job Insecurity, Work Stress, and the Work Environment on Turnover Intention: A Case Study at the Company of Supplier Security System in Indonesia. Paper presented at the 4th International Conference on Management, Economics and Business (ICMEB 2019).

Arsenio, W.F., Loria, S. (2014), Coping with negative emotions: Connections with adolescents' academic performance and stress. The Journal of Genetic Psychology, 175(1), 76-90.

Arshadi, N. and Damiri, H. (2013), The relationship of job stress with turnover intention and job performance: Moderating role of OBSE. ProceediaSocial and Behavioral Sciences, 84, 706-710.

Ashford, S. J., Lee, C. and Bobko, P. (1989). Content, cause, and consequences of job insecurity: A theory-based measure and substantive test. *Academy of Management journal,* 32(4), 803-829.

Ayas, N. T., Barger, L. K., Cade, B. E. et al. (2006) Extended work duration and the risk of self-reported percutaneous injuries in interns. JAMA; 296:1055–62.

Baldwin, Jr. D. C., Daugherty, S. R., Tsai, R., Scotti, Jr. M. J. (2003) A national survey of residents' self-reported work hours: thinking beyond specialty. Acad Med.; 78:1154–63.

Blase, J.J. (1986), A qualitative analysis of sources of teacher stress: Consequences for performance. American Educational Research Journal, 23(1), 13-40.

Blau, G. (1981), An empirical investigation of job stress, social support, service length, and job strain. Organizational Behavior and Human Performance, 27(2), 279-302.

Borg, I. and Elizur, D. (1992). Job insecurity: Correlates, moderators and measurement. International Journal of manpower.

Brun, J. P. and Lamarche, C. (2006), Évaluation des coûts du stress au travail. Rapport de recherche, Chaire de Gestion de la Santé et de la Sécurité au Travail. Université Laval.

Chen, MF., Lin, CP. and Lien, GY. (2010), Modeling job stress as a mediating role in predicting turnover intention. The Service Industries Journal, 31(8), 1327-1345.

Chiang, F.F.T., Birtch, T.A. and Kwan, H.K. (2010), The moderating roles of job control and worklife balance practices one employee stress in the hotel and catering industry. International Journal of Hospitality Management, 29, 25-32.

Chiu, C.K., Chien, C.S., Lin, C.P. and Hsiao, C.Y. (2005), Understanding hospital employee job stress and turnover intentions in a practical setting: The moderating role of locus of control. Journal of Management Development, 24(10), 837-855.

Çınar, O., Karcıoğlu, F. and Aslan, İ. (2014). The relationships among organizational cynicism, job insecurity and turnover intention: A survey study in Erzurum/Turkey. *Procedia-Social and Behavioral Sciences,* 150, 429-437.

Clark, C. D. (1981). The Influence of Job Satisfaction, Perceived Job Alternatives, and Central Life Interest on the Job Turnover Intentions of County Extension Agents (Unpublished doctoral dissertation).The Ohio State University. Columbus, Ohio.

Clark, R. W., Norland, E., & Smith, K. (1992).Stress and turnover among Extension directors. Journal of Extension, 30(2)

Davy, J. A., Kinicki, A. J. and Scheck, C. L. (1991). Developing and testing a model of survivor responses to layoffs. Journal of Vocational Behavior, 38(3), 302-317.

Dunham, J. (2001). Stress in the workplace: Past, present and future. Whurr, London.

Fang Mao C.J. T., Hsu, Y., Mao, C., Lu, S. and Chen, M. (2011) A Field Study of Overtime Work and Shift Work for Hospital Employees in Taiwan. J Occup Safety Health; 19:233-246.

Gerber, P.D., Nel, P.S. and Van Dyk, P.S. (1987), Human Resources Management. Halfway House, Gauteng: Southern Book Publishers.

Greenhalgh, L. and Rosenblatt, Z. (1984). Job insecurity: Toward conceptual clarity. *Academy of Management review,* 9(3), 438-448.

Hanafiah, M. (2014).Pengaruhkepuasankerjadanketidakamanankerja (job insecurity) denganintensipindahkerja (turnover) padakaryawan PT. *JurnalPsikologi,* 1(3), 303-312.

Harder, A., Gouldthorpe, J., & Goodwin, J. (2015). Exploring organizational factors related to extension employee burnout. Journal of Extension, 53(2).

Hellgren, J., Sverke, M. and Isaksson, K. (1999). A two-dimensional approach to job insecurity: Consequences for employee attitudes and well-being. *European Journal of Work and Organizational Psychology,* 8(2), 179-195.

Heponiemi, T., Kouvonen, A. and Vanska, J. (2009) The association of distress and sleeping problems with physicians' intentions to change profession: the moderating effect of job control. J Occup Health Psychol.; 14:365–73.

Hon, A.H., Chan, W.W. and Lu, L. (2013), Overcoming work-related stress and promoting employee creativity in hotel industry: The role of task feedback from supervisor. International Journal of Hospitality Management, 33, 416-424.

Hsieh, A.T. and Yen, C.H. (2005), The effect of customer participation on service providers' job stress. The Service Industries Journal, 25(7), 891-905.

Jacobson, D. (1991). Mapping the context, [w:] Hartley J., Jacobson D., Klandermans B., van Vuuren, T. (red.): Job insecurity. Coping with jobs at risk: Sage Publications, Londyn.

Jamal, M. (2005). Burnout among Canadian and Chinese employees: A cross-cultural study. European Management Review, 2, 224-230.

Kankaanranta, T., Nummi, T. and Vainiomaki, J. (2007) The role of job satisfaction, job dissatisfaction and demographic factors on physicians' intentions to switch work sector from public to private. Health Policy; 83:50–64.

Karasek, R., & Theorell, T. (1990).Healthy work.Stress, productivity, and the reconstruction of working life. New York: Basic Books Inc.

Kutilek, L. M. (2000). Learning from those who leave.Journal of Extension, 38(3).

Landsbergis PA (2003). The changing organization of work and the safety and health of working people: A commentary. Journal of Occupationaandl Environmental Medicine, 45, 61 72.

Larson, L. L. (2004), Internal auditors and job stress. Managerial Auditing Journal, Vol. 19(9), pp. 1119- 1130.

Law, J., Pearce, P.L. and Woods, B.A. (1995), Stress and coping in tourist attraction employees. Tourism Management, 16(4), 277-284.

Lazarus, R.S. and Launier, R. (1978), Stress-related transactions between person and environment. In: Perspectives in Interactional Psychology. US: Springer. 287-327.

Lo, K. and Lamm, F. (2005), Occupational stress in the hospitality industry an employment relations perspective. New Zealand Journal of Employment Relations, 30(1), 23-47.

Masselink, L. E., Lee, S. Y. and Konrad, T. R. (2008) Workplace relational factors and physicians' intention to withdraw from practice. Health Care Manage Rev; 33:178–87.

Mauno, S., Leskinen, E., and Kinnunen, U. (2001). Multi- wave, multi-variable models of job insecurity: applying different scales in studying the stability of job insecurity. *Journal of Organizational Behavior: The International Journal of Industrial, Occupational and Organizational Psychology and Behavior,* 22(8), 919-937.

Motowidlo, S.J., Packard, J.S. and Manning, M.R. (1986), Occupational stress: Its causes and consequences for job performance. Journal of Applied Psychology, 71(4), 618.

Netemeyer, R.G., Maxham, J.G.3rd, Pullig, C. (2005), Conflicts in the work–family interface: Links to job stress, customer service employee performance, and customer purchase intent. Journal of Marketing, 69(2), 130-143.

Noor, S. and Maad, N. (2008), Examining the relationship between work life conflict, stress and turnover intentions among marketing executives in Pakistan. International Journal of Business and Management, 3(11), 93-102.

O'Neill, J.W., Davis, K. (2011), Work stress and wellbeing in the hotel industry. International Journal of Hospitality Management, 30(2), 385-390.

Paillé, P. (2011), Stressful Work, Citizenship Behaviour and Intention to Leave the Organization in a High Turnover Environment: Examining the Mediating Role of Job Satisfaction, Journal of Management Research, Vol. 3(1), pp. E1, 1-14.

Parker, D.F. and DeCotiis, T.A. (1983), Organizational determinants of job stress. Organizational Behavior and Human Performance, 32(2), 160-177.

Probst, T. M. (1999). Antecedents and consequences of job security: An integrated model

Putra, K. A. R. and Suana, I. W. (2016). PengaruhKomitmenOrganisasional Dan Job Insecurity Terhadap Turnover Intention PadaKaryawanArma Museum & Resort Ubud.*E-JurnalManajemen,* 5(12).

Repetti, R. L., Matthews, K. A. and Waldron, I. (1989). Employment and Women's Health: Effects of Paid Employment on Women's Mental and Physical Health. American Psychologist, 44 (11), pp. 1394-1401

Rivai, V. and Sagala, E. J. (2011).ManajemenSumberDayaManusiaUntuk Perusahaan (2nd ed.). Jakarta: Raja GrafindoPersada.

Rousan, L. M. and Henderson, J. L. (1996).Agent turnover in Ohio State University Extension. Journal of Agricultural Education, 37(2), 56–62.

Rub, R. F. A. A. (2006), Job stress, job performance, and social support among hospital nurses. Journal of Nursing Scholarship, Vol. 36(1), pp. 73-78.

Safrit, R. D. and Owen, M. B. (2010).A conceptual model for retaining county Extension program professionals.Journal of Extension, 48(2).

Shankar, G., Keerthi, K. (2010), The ımpact of stress on low level employees of star hotels with special reference to Chennai. Share Journal of Multidisciplinary Research and Studies, 1, 90-94.

Smith, A. (2000). The Scale of Perceived Occupational Stress.Occupational Medicine, vol. 50, issue 5, pp. 294–298, doi.org/10.1093/occmed/50.5.294.

Strong, R. and Harder, A. (2009). Implications of maintenance and motivation factors on Extension agent turnover.Journal of Extension, 47(1).

Tett, R. & Meyer, J. (1993). Job satisfaction, organizational commitment, turnover intention and turnover: Path analyses based on meta-analytic findings. Personnel Psychology, 46, 259-293.

Topaloğlu, M. and Turner, M. (1998), Otelişletmelerindestresindeğerlendirilmesi: Ampirikbirçalışma. Anatolia TurizmAraştırmalarıDergisi, Yıl, 9, 39-45.

Tsai1, Y., Huang, N., Chien, L., Chiang, J., and Chiou, S. et al. (2016) "Work hours and turnover intention among hospital physicians in Taiwan: does income matter?" BMC Health Services Research, 16:667

Van Tilburg, E. (1987). Turnover Intentions of Ohio Cooperative Extension County Agents. Journal of the American Association of Teacher Educators in Agriculture, 28(3), 7–15.

Van Tilburg, E. (1988). Performance-reward contingency: The role and relationships of perceived equity in the job performance-job satisfaction question. Journal of the American Association of Teacher Educators in Agriculture, 29(2), 25–31.

Woodrow, S. I., Segouin, C., Armbruster, J., Hamstra, S. J. and Hodges, B. (2006) Duty hours reforms in the United States, France, and Canada: is it time to refocus our attention on education? Acad Med; 81:1045–51.

Yang, M. Y. F. L. (2007) An Analysis of the Work Hours and Related Factors Associated with Attending Physicians and Residents in Teaching Hospitals. J Med Education; 11:222-233.

Yoon, G.S. and Kim, S.Y. (2010), Influences of job stress and burnout on turnover intention of nurses. Journal of Korean Academy of Nursing Administration, 16(4), 507-516.

Young, J. A., Stone, J., Aliaga, O. and Shuck, B. (2013). Job embeddedness theory: Can it help explain employee retention among extension agents? Journal of Extension, 51(4).

Appendix-B

Table B1: Descriptive Statistics on Job Stress

		SD	D	N	A	SA	Mean	SD	Cronbach Alpha
		%	%	%	%	%			
Working Hour									
WH1	Inflexibility in time	11.2	18.2	17.6	39.2	12.7	3.77	1.25	
WH2	Less scope for part-time work	7.6	18.0	21.2	37.6	15.3	3.62	1.14	
WH3	Minimum scope to work under compressed work schedule	11.0	14.3	26.2	28.3	19.4	3.56	1.26	.834
WH4	Inflexible working hour	8.4	19.2	26.4	32.0	11.6	3.71	1.17	
Work Load									
WL1	Minimum job sharing opportunity	12.8	29.9	17.7	29.3	9.2	3.85	1.20	
WL2	Work overload	7.6	22.8	26.4	32.6	10.2	3.91	1.12	
WL3	Role overload	6.8	24.5	26.4	30.4	10.0	3.55	1.13	
WL4	Lack of cooperation from the	10.0	22.6	26.9	27.1	14.5	3.72	1.22	.863

	coworkers								
WL5	Lack of continuous support from the colleagues	9.0	23.0	22.5	26.3	18.2	3.62	1.24	
Job Security									.871
JS1	Fear of losing job	6.7	15.8	28.4	38.5	10.8	3.91	1.07	
JS2	Vulnerability at workplace	7.6	26.4	25.4	27.6	11.7	3.74	1.16	
JS3	Slow Promotion	5.7	19.2	25.3	37.6	10.3	3.57	1.10	
JS4	Bullying at workplace	7.4	18.3	23.8	43.6	8.5	3.64	1.09	
JS5	Absence of equal employment opportunity	8.5	18.3	21.6	32.6	15.6	3.87	1.16	
JS6	Work under rigid employment agreement	5.8	19.4	22.7	39.5	12.7	3.76	1.07	.903
JS7	Lack of equal pay opportunity	6.7	11.4	22.6	43.7	11.4	3.61	1.09	

Table B2: Descriptive Statistics on Turnover Intention

		SD	D	N	A	SA	Mean	SD	Cronbach Alpha
		%	%	%	%	%			
Turnover intention									
TI1	High absenteeism in job	10.3	18.6	30.4	32.6	9.3	3.60	1.17	.872
TI2	Excessive stress in job	7.8	22.6	29.3	32.5	7.6	3.88	1.11	
TI3	High burnout in job	10.4	18.6	24.7	31.7	12.4	3.83	1.16	
TI4	Lack of loyalty to the organization	7.6	16.5	24.3	33.8	14.7	3.71	1.12	
TI5	Thinking of leaving the organization	9.3	21.6	23.7	26.4	16.3	3.67	1.23	

Authors:

Shamim Al Aziz Lalinis working as an AssitantProfessor in the Department of Business Administration, North East University Bangladesh, Sylhet

Dr. MazharulHasanMazumder is working as a Professor in the Department of Business Administration, Shahjalal University of Science and Technology, Sylhet-3114, Bangladesh.

SakufaChowdhuryis working as an AssitantProfessor in the Department of Business Administration, North East University Bangladesh, Sylhet